INSTALLATION & OPERATION MANUAL

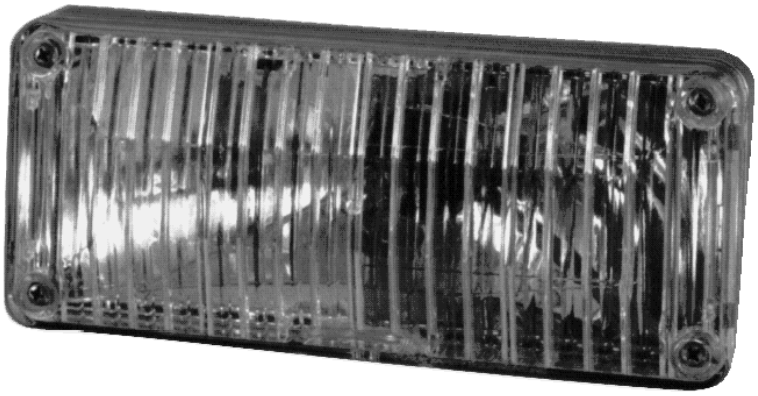

SERIES 41
STOP/TAIL, TURN SIGNAL & REVERSE LIGHT HEADS

Code 3, Inc., a subsidiary of
Public Safety Equipment, Inc.

CODE 3 INC.®
PUBLIC SAFETY EQUIPMENT, INC.

SERIES 41

STOP/TAIL, TURN SIGNAL & REVERSE LIGHT HEADS

Contents:

Introduction 2
Unpacking & Pre-Installation 2
Installation And Wiring 2-4
Parts & Exploded View 5
Maintenance 6
Options 7
Warranty 8

IMPORTANT: ***Read all instructions and warnings before installing and using.***
INSTALLER: ***This manual must be delivered to the end user of this equipment.***

Introduction

The 41 Series Stop/Tail, Turn Signal, and Reverse Light Heads are designed to meet the requirements of Federal Motor Vehicle Safety Standard No. 108.

The product is designed to be installed on the rear of the vehicle. The product group includes a stop/tail light(red), a turn signal (amber) with directional arrow, and a reverse light(clear). The +12V system is to be connected to the stop/tail, turn signal, and reverse light circuitry of the vehicle.

WARNING!

Read and follow the manufacturer's instructions before installing or using this device. The vehicle operator should insure daily that all features of the device operate correctly. In use, the vehicle operator should insure the projection of the lights signal is not blocked by vehicle components (i.e. open trunks or compartment doors), or other obstructions. Proper installation is vital to the performance of this device and the safe operation of the vehicle.

Unpacking And Pre-Installation

Carefully remove the light head from its protective packaging. Inspect the unit for transit damage(broken lamps, scratched lenses, etc.). Report any damage to the carrier and keep the shipping carton.

Verify that there are four (4) #6 X 1-1/2" mounting screws included for each lighthead.

If the three wire cable package was also purchased, verify that each end is terminated with AMP #60619-1 pin sockets and the parts bag contains two (2) AMP #1-480303-0 Mate-N-Lock socket housings and one #8 noninsulated ring terminal.

Installation And Wiring

Use the following task list as a guide for installing the 41 Series light heads.

1. Select the desired mounting location for the light head assembly.

2. Verify 2 inches of clearance exists behind the mounting surface, see Figure 1. (Not necessary for 41SPKG.)

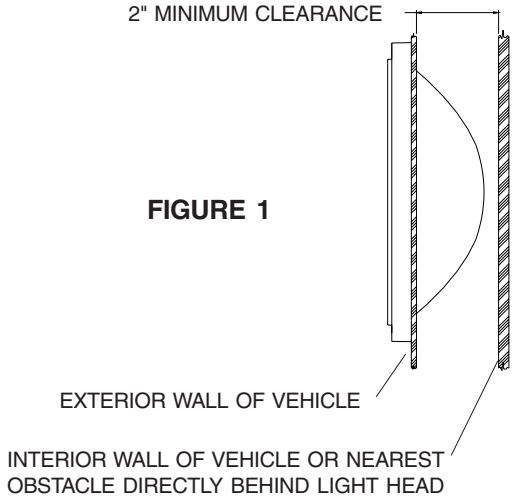

FIGURE 1

3. Cut the opening and drill the holes, use the template in Figure 2 or the trim bezel if your light head is so equipped. (No opening necessary for 41SPKG.)

4. With one end on the cable at the light head mounting location, route the wire cable back to the cab of the vehicle or route to connect into the existing stop/tail, turn signal, and reverse light wire circuitry at the rear of the vehicle.

5. At the light head end of the cable, insert the AMP sockets into the AMP socket housing as shown in Figure 3. Cut the shield wire flush with the jacket.

6. Allow at least 3 inches of slack at the light head to facilitate lamp replacement.

7. At the power source end of the cable determine if the cable length is acceptable. If a shorter length is required, cut the cable to the proper length and strip back the outer jacket three inches.

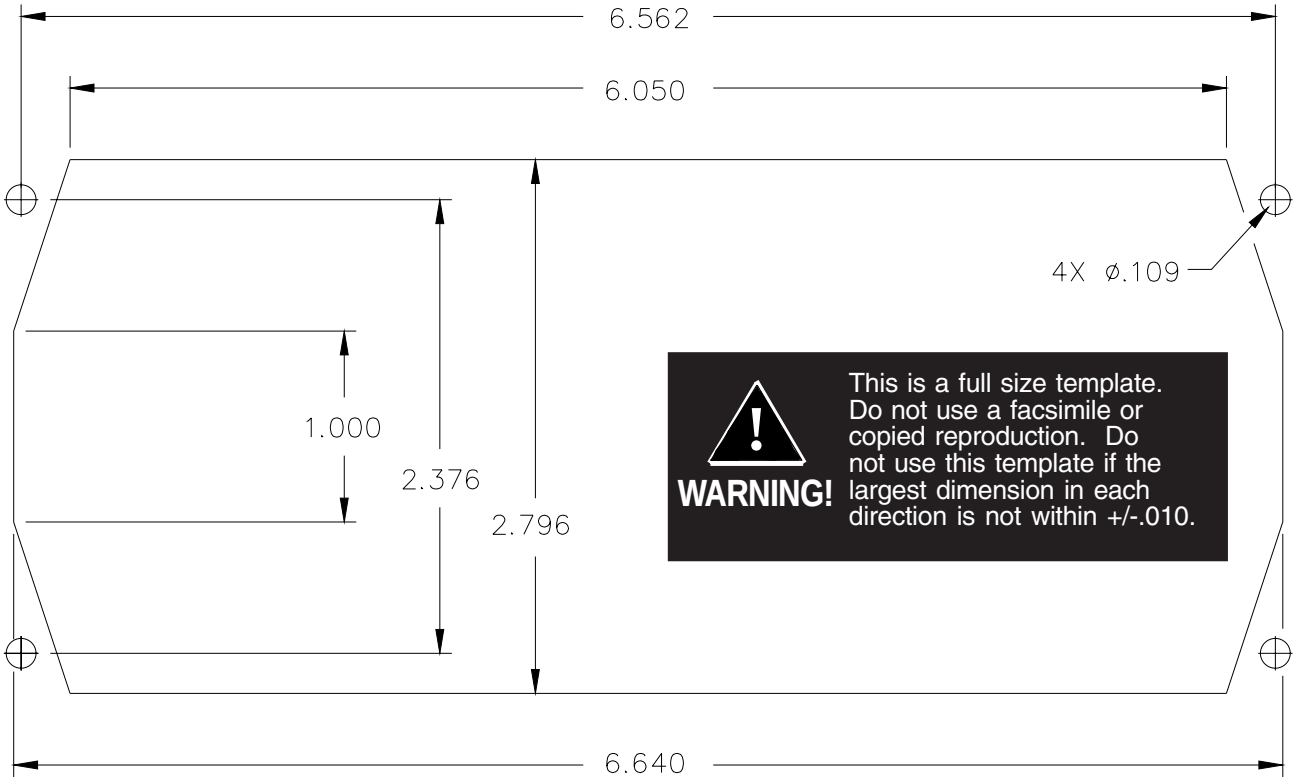

FIGURE 2

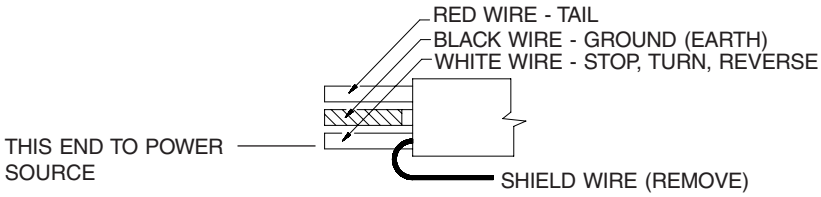

FIGURE 3

8. Use the connection diagram in Figure 4 to connect the wiring for the light application.

9. Test each light function by connecting the dual filament lamp assembly to the cable before final installation.

10. Route the assembled cable with the AMP Mate-N-Lock connectors through the reflector. Connect the dual filament lamp to the cable. Align the largest flange of the dual filament socket with the largest cut-out on the reflector. Press and twist clockwise 1/8 turn to secure the lamp in the reflector.

11. Verify the “TOP” lens engraving is facing upward. Mount the reflector assembly and lens by installing the four screws.

For 41 series models with optional bezel, snap the reflector into the bezel making sure the reflector's "TOP" aligns with the bezel's 7023 product number.

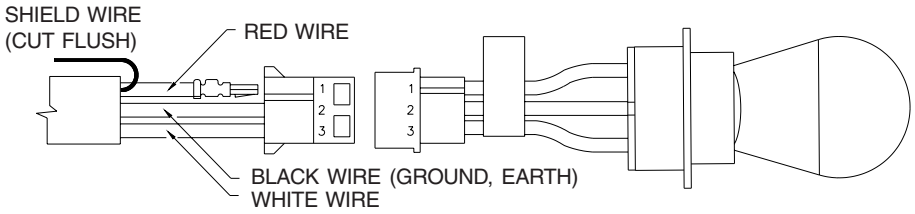

FIGURE 4

CONNECTION TABLE			
FUNCTION	**RED**	**WHITE**	**BLACK (GROUND, EARTH)**
STOP		X	X
TAIL	X		X
TURN		X	X
REVERSE		X	X

WARNING!

Larger wires and tight connections will provide longer service life for components. For high current wires it is highly recommended that terminal blocks or soldered connections be used with shrink tubing to protect the connections. Do not use insulation displacement connectors (e.g. 3M® Scotchlock type connectors). Route wiring using grommets and sealant when passing through compartment walls. Minimize the number of splices to reduce voltage drop. High ambient temperatures (e.g. underhood) will significantly reduce the current carrying capacity of wires, fuses, and circuit breakers. Use "SXL" type wire in engine compartment. All wiring should conform to the minimum wire size and other recommendations of the manufacturer and be protected from moving parts and hot surfaces. Looms, grommets, cable ties, and similar installation hardware should be used to anchor and protect all wiring.
Fuses or circuit breakers should be located as close to the power takeoff points as possible and properly sized to protect the wiring and devices.
Particular attention should be paid to the location and method of making electrical connections and splices to protect these points from corrosion and loss of conductivity.
Ground terminations should only be made to substantial chassis components, preferably directly to the vehicle battery.
The user should install a fuse sized to approximately 125% of the maximum Amp capacity in the supply line to protect against short circuits. For example, a 30 Amp fuse should carry a maximum of 24 Amps.
DO NOT USE 1/4" DIAMETER GLASS FUSES AS THEY ARE NOT SUITABLE FOR CONTINUOUS DUTY IN SIZES ABOVE 15 AMPS.
Circuit breakers are very sensitive to high temperatures and will "false trip" when mounted in hot environments or operated close to their capacity.

Parts & Exploded Views

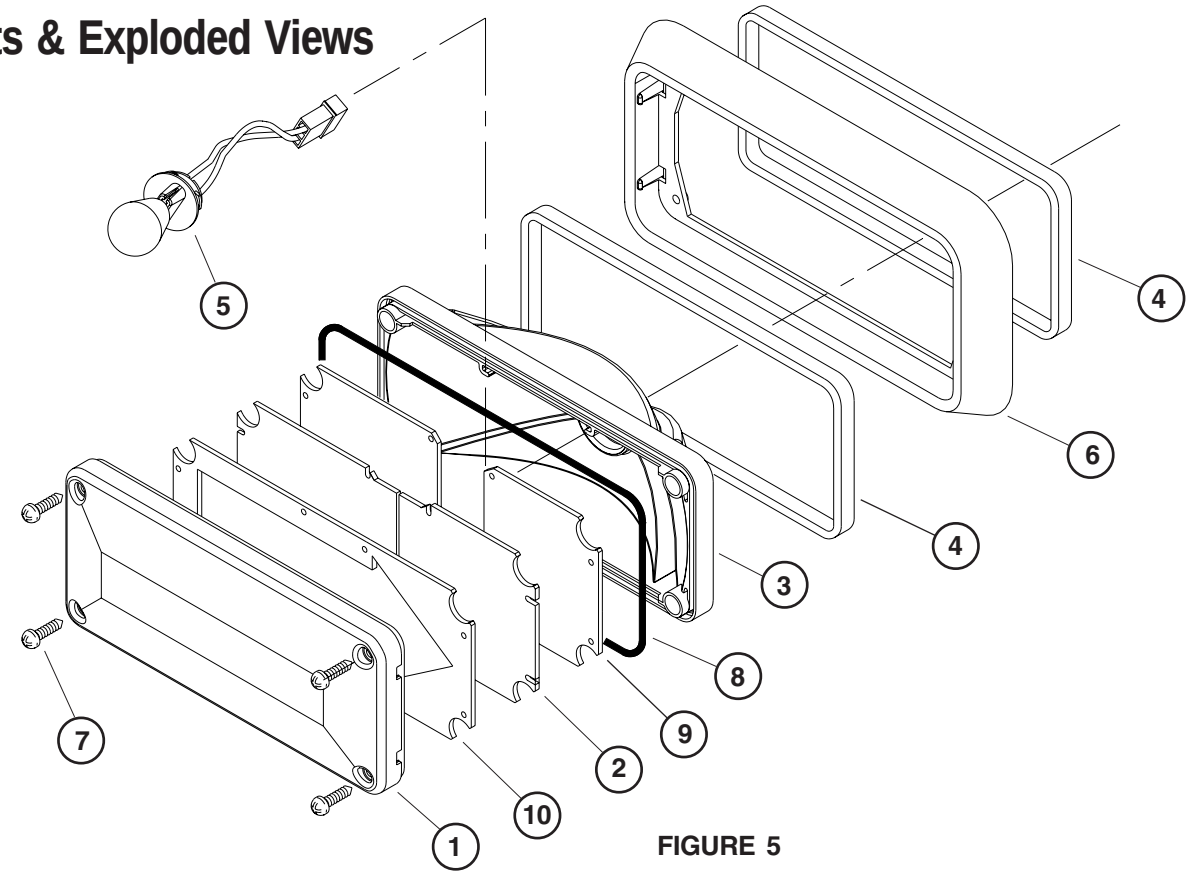

FIGURE 5

Parts List

Ref No.	Description	Part No.
1	Lens	T02271 (Clear) T02272 (Red) T02274 (Amber)
2	Filter Half (2 Shown)	S81360M (Clear)
3	Reflector	T07021
4	Gasket	T05328
5	Dual Filament Lamp Assembly	S81362M
6	Trim Bezel	T07023
7	#6 Sheet Metal Screw, 1 1/2" long	T07028
8	Rope Gasket	T07005
9	Scene Light Filter (only with Reverse lights)	T02291 (8° and 12°)
10	Turn Arrow Insert (only with Turn Signal lights)	T05875

Parts Not Shown

Ref No.	Description	Part No.
	Stack Housing	T05872
	Surface Mount Stack Housing	T03824

Maintenance

Dual Filament Lamp Assembly Replacement

WARNING! Lamps are extremely hot! Allow to cool completely before attempting to remove. Gloves and eye protection should be worn when handling lamps. Accidental breakage can result in flying glass.

1. Turn off power to the power source and allow the lamp assembly to cool for 10 minutes.
2. Remove the lens by unscrewing the four mounting screws.
3. Carefully grab the base of the lamp assembly and twist counterclockwise 1/8 turn. Pull straight out.
4. Disconnect the lamp assembly from the cable.
5. Insert the replacement lamp assembly into the reflector. Twist clockwise 1/8 turn until you feel the locking features of the socket engage.
6. Test the lamp by connecting the lamp assembly to the cable. Switch the power source on. Verifying the lamp is good, turn off the power source.
7. Push the assembled AMP Mate-N-Lock connectors through the cut out in the vehicle for the reflector.
8. Verify the "7021" product number on the reflector is on the top. Verify "TOP" lens engraving is on the top of the lens. Mount the reflector and lens by installing the four screws.

Lens Cleaning

1. Remove the lens by unscrewing the four mounting screws.
2. Using water and a soft cloth or Code 3 lens polish and a very soft paper towel or facial tissue, clean outer surfaces of the lens and half filters.
3. Plastic scratches easily, cleaning is recommended only when necessary about every six months.

CAUTION: Car wash brushes will scratch the lenses.

WARNING! If attempting to clean the reflector, use only a mild glass cleaner and a very soft cloth. Do not use any wax type cleaners as the wax will dull the finish and impair light effectiveness.

Options

The 41 Series Stop/Tail Turn Light Product Group includes the following models:

Single Products

41ST	41 Series Stop/Tail Light Product
41TA	41 Series Turn Arrow Light Product
41RV	41 Series Reverse Light Product
41STBZ	41 Series Stop/Tail Light Product with Bezel
41TABZ	41 Series Turn Arrow Light Product with Bezel
41RVBZ	41 Series Reverse Light Product with Bezel
41PKG	41 Series Stop/Tail, Turn, Reverse Lights with Stack Housing
41SPKG	41 Series Stop/Tail, Turn, Reverse Lights with Surface Mount Housing.

Case Products

41STK	Case of ten model 41 Series Stop/Tail Light Product
41TAK	Case of ten model 41 Series Turn Arrow Light Product
41RVK	Case of ten model 41 Series Reverse Light Product
41STZK	Case of ten model 41 Series Stop/Tail Light Product with Bezel
41TAZK	Case of ten model 41 Series Turn Arrow Light Product with Bezel
41RVZK	Case of ten model 41 Series Reverse Light Product with Bezel

WARRANTY

This product was tested and found to be operational at the time of manufacture. Provided this product is installed and operated in accordance with the manufacturer's recommendations, Code 3, Inc. guarantees all halogen reflector assemblies and all other parts and components, except the halogen lamp assemblies, for a period of 1 year from the date of purchase or delivery, whichever is later. Units demonstrated to be defective within the warranty period will be repaired or replaced at the factory service center at no cost.

Use of a lamp or other electrical load of a wattage higher than installed or recommended by the factory, or use of inappropriate or inadequate wiring or circuit protection causes this warranty to become void. Failure or destruction of the product resulting from abuse or unusual use and/or accidents is not covered by this warranty. Use of non Code 3, Inc. components and assemblies may cause damage to the system and/or personal injury, and voids all warranties.

Code 3, Inc. shall in no way be liable for other damages including consequential, indirect or special damages whether loss is due to negligence or breach of warranty.

CODE 3, INC. MAKES NO OTHER EXPRESS OR IMPLIED WARRANTY INCLUDING, WITHOUT LIMITATION, WARRANTIES OF FITNESS OR MERCHANTABILITY, WITH RESPECT TO THIS PRODUCT.

PRODUCT RETURNS

In order to provide you with faster service, if you are going to return a product for repair or replacement*, please contact our factory to obtain a Return Authorization Number (RA number) before you ship the product to Code 3, Inc.. Write the RA number clearly on the package near the mailing label. Be sure you use sufficient packing materials to avoid damage to the product being returned while in transit.

*Code 3, Inc. reserves the right to repair or replace product at its discretion. Code 3, Inc. assumes no responsibility or liability for expenses incurred for the removal and/or reinstallation of products requiring service and/or repair.

PROBLEMS OR QUESTIONS? CALL OUR TECHNICAL ASSISTANCE HOTLINE (314) 996-2800

Code 3,® Inc., a subsidiary of
Public Safety Equipment, Inc.

CODE 3® INC
PUBLIC SAFETY EQUIPMENT, INC.

Code 3, Inc.
10986 N. Warson Road
St. Louis, Missouri 63114-2029—USA
Ph. (314) 426-2700 Fax (314) 426-1337
www.code3pse.com

Code 3 is a registered trademark of Code 3, Inc. a subsidiary of Public Safety Equipment, Inc.
3M is a registered trademark of 3M Company

Revision 5, 1105 - Instruction Book Part No. T05871
©2005 Code 3, Inc. Printed in USA