Hide-A-LED™

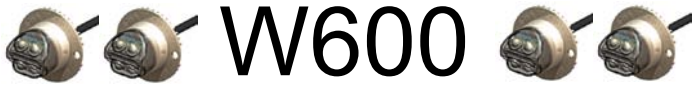

W600

SOLID COLOR SPLIT COLOR

INSTALLATION GUIDE

NOVA® ELECTRONICS

ECCO GROUP

833 W. Diamond St Boise, Idaho 83705
TEL: 800-635-5900 www.eccogroup.com

TECHNICAL SPECIFICATIONS

BLUE, WHITE, GREEN, PURPLE

INPUT VOLTAGE	10 to 30 Volts DC.
INPUT CURRENT	0.5A @ 12.8V, 0.2A @ 25.6V
LIGHT OUTPUT	BLUE: 155+ LUMENS
SPLIT COLOR IS HALF OF VALUE SHOWN PER SIDE	GREEN: 200+ LUMENS WHITE, PURPLE: 660+ LUMENS

RED & AMBER

INPUT VOLTAGE	12.8V (10 to 16 Vdc)
INPUT CURRENT	0.25 Amps
LIGHT OUTPUT	AMBER: 160+ LUMENS RED: 123+ LUMENS

CABLE LENGTH	9 FT.
LED ELEMENTS	4
FLASH PATTERNS	16 (8 Standard, 8 optional cycle)
MAX NUMBER OF SYNC'D HEADS	64
WARRANTY PERIOD	5 YEARS

SPLIT COLOR:

INPUT VOLTAGE:	10 to 30 Vdc, 0.5 Amps

DIMENSIONS

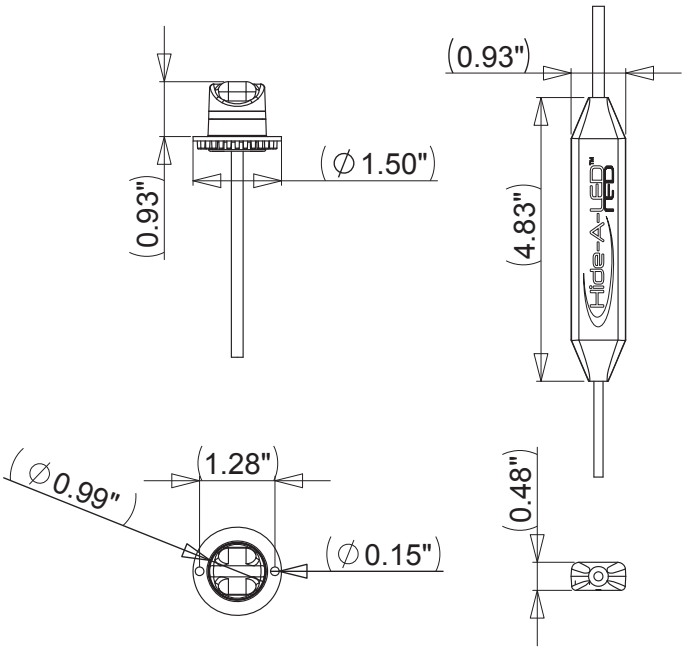

LED HEAD

POWER MODULE

ITEMS INCLUDED

(1) HIDE-A-LED™ HEAD WITH BUILT IN POWER MODULE AND 9' CABLE.
(1) MOUNTING GASKETS
(2) #6 X 1/2" STAINLESS STEEL MOUNTING SCREWS

PATENT PENDING

920-9078-00 REV. B

MOUNTING

Drill a 1" diameter hole in the reflector of the lens assembly. A 1" hole saw is typically used. The HIDE-A-LED™ may be used as a template to mark the location of the two screw holes. The W600 may be mounted in either the back surface, bottom or sides of a reflector. Drill pilot holes with a 7/64" drill bit. Install the HIDE-A-LED™ into the lens assembly using the supplied gasket and screws. If the mounting surface is curved additional sealing may be necessary. Use RTV Silicone sealant if needed.

LOCATE LED HEAD AT LEAST 1" AWAY FROM ANY FACTORY BULB!

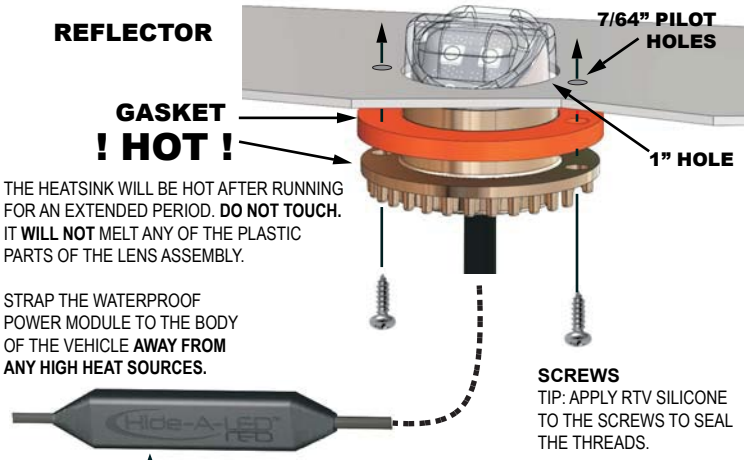

FOR DUAL WALL REFLECTORS: FIRST USE A 1.5" HOLE SAW TO DRILL THROUGH OUTER LAYER ONLY. THEN USE 1" HOLE SAW TO DRILL THROUGH INNER LAYER USING SAME PILOT DRILL HOLE. INSTALL THE LED HEAD THROUGH THE 1.5" HOLE AND SEAL THE GAP WITH RTV SILICONE.

ELECTRICAL CONNECTIONS

The cable on the HIDE-A-LED™ was made long enough to run across the front or the rear of a vehicle. Trim the cable shorter if needed. The wiring diagram on page 2 shows a typical install.

RED: +V
Connect to +V through an ON/OFF switch.
The use of a fuse located close to the voltage source is recommended. Size the fuse according to the number of heads used in the system. 18AWG or larger wire is recommended.

BLACK: - GROUND
Connect to - GROUND vehicle chassis.
18AWG or larger wire is recommended.

1™ SYNC

BLUE: Flash pattern SYNC and SELECTION wire.
If you wish to have all the LED heads synchronize their flash timings and patterns with each other then all the BLUE wires must be connected together(64 Heads Maximum).
The BLUE wire is also used to select the flash pattern.
Touch the BLUE wire to +V to select the next pattern in the FLASH PATTERN LIST. The BLUE wire can also be run to a momentary push-button located on the dashboard to allow the flash pattern to be changed when desired.
Note: Do not connect the BLUE wire to - Ground.
It will disrupt the flash pattern sync signal.

ELECTRICAL CONNECTIONS

YELLOW: Alternating / Simultaneous selection.
The BLUE wires of all HIDE-A-LED™ heads must be connected together for the alternating /simultaneous function to work.
Connect to either +V or GROUND (GND).
The YELLOW wire makes the head fire AT THE SAME TIME or ALTERNATE with the other heads in the system.
Heads with YELLOW connected to +V fire at the same time.
Heads with YELLOW connected to GND fire at the same time.
Heads with YELLOW connected to +V will ALTERNATE with heads that have YELLOW connected to GND.
The YELLOW wire has no function in STEADY ON mode.

SPLIT COLOR: Split color heads will always alternate flash the two colors. The YELLOW wire will select which colors flash at the same time and which alternate.

The HIDE-A-LED™ will also synchronize with any BULL LED™ head. The wiring colors and functions are identical.

WIRING DIAGRAM

INSTALLATION OF 4 HIDE-A-LED™ USING AN ON/OFF SWITCH AS WELL AS A MOMENTARY SWITCH TO SELECT FLASH PATTERNS (NOT SUPPLIED)

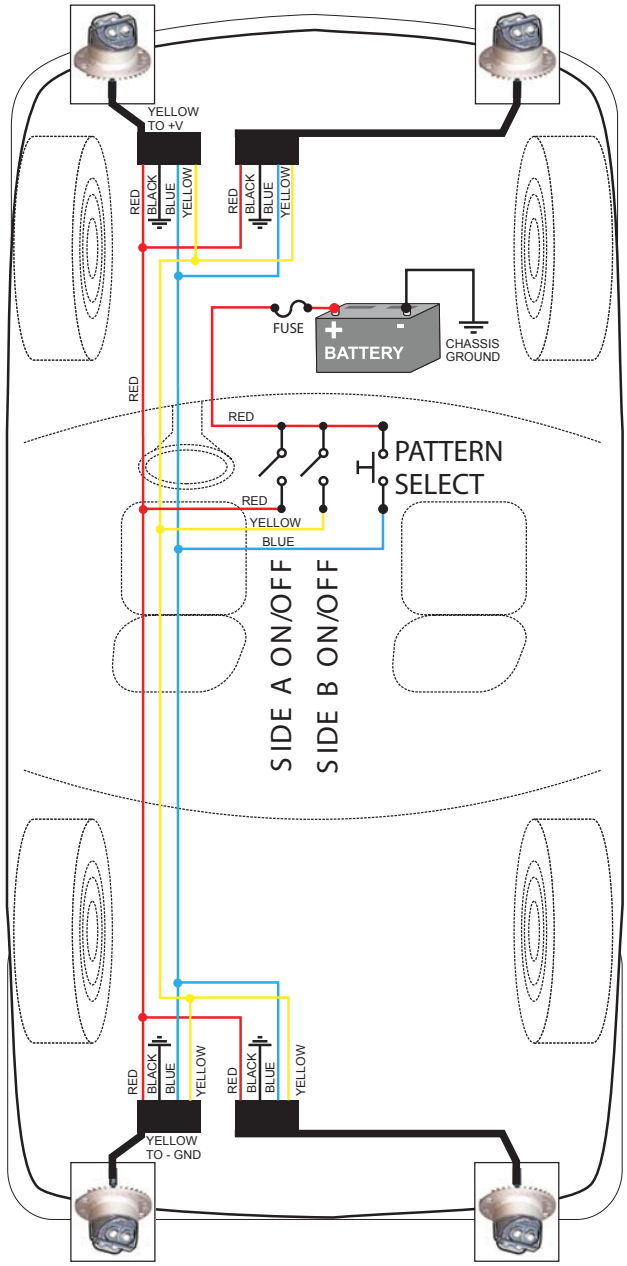

© 2009

FLASH PATTERNS

POWER-UP RESET:

After installing the system it is best to do a POWER-UP RESET the first time to ensure that all heads are in sync.
Touch **BLUE** wire to +V while applying power for 1 second.
Release **BLUE** wire. All heads will reset to Pattern #2.
If you have installed a pattern select pushbutton, press and hold pattern select while turning power switch ON. Release pattern select after 1 second. To select a flash pattern, touch **BLUE** to +V or press pattern select switch to increment the flash pattern. The heads will remember the selected pattern even if power is removed.

STANDARD ONLY
STANDARD + CYCLE

STANDARD PATTERNS			
#	Pattern:	Frequency:	Description:
1	Quad Flash	1.25 Hz	75 Quad Flashes Per Minute
2	Double Flash	1.25 Hz	75 Double Flashes Per Minute
3	Triple Flash	1.53 Hz	92.3 Triple Flashes Per Minute
4	DeciBlast	1.42 Hz	85.5 Deci Flashes Per Minute
5	Single Flash	1.25 Hz	75 Single Flashes Per Minute
6	Mega Flash	1.90 Hz	114 Single Flashes Per Minute
7	Triple+Burst	1.37 Hz	82.5 Triple+Burst Flashes Per Minute
8	Steady On		Steady on. **Split Color = Fast Mega**
CYCLE PATTERNS			
9	Cycle All		Cycle through patterns 1 to 7
10	Double-Triple+Burst		2 Double, 2 Triple+Burst cycle
11	Cycle Classic		1 Double, 1 Quad, 2 Mega cycle
12	Quad-Mega		3 Quad, 4 Mega cycle
13	Single-Quad		2 Single, 2 Quad cycle
14	DeciBlast-Quad		2 DeciBlast, 2 Quad cycle
15	Single-Triple-DeciBlast		2 Single, 2 Triple, 2 DeciBlast cycle
16	Mega-Triple+Burst		1 Mega, 1 Triple+Burst cycle

STANDARD PATTERNS:
The HIDE-A-LED™ ships with only the standard patterns enabled (1 through 8). To enable cycle flash patterns follow the procedure below.

CYCLE PATTERNS:
You may add patterns 9 through 16 by following this procedure:
1) Touch BLUE wires to +V (RED wire) while applying power.
If you have installed a pattern select push-button, press and hold pattern select while turning power switch ON.

2) Hold BLUE wires on +V for 5 SECONDS (heads will not be flashing during this time). After 5 SECONDS the heads will flash once or twice to indicate the flash pattern list that has been selected:
ONE FLASH = Standard Patterns only.
TWO FLASHES = Standard + Cycle patterns.

3) Remove the BLUE wires from +V (or release push-button).

You may switch the pattern set at any time as many times as you wish. All heads will remember the pattern set that was selected even when power is removed.

TROUBLESHOOTING

HEAD NOT FLASHING:
Check the RED and BLACK wires for a reversed connection. (Reverse connection will not damage the unit). Check RED and BLACK wires for either a bad splice or a corroded ground connection.

HEADS NOT SYNCHRONIZING:
Check for a short circuit on the BLUE wire to either +V or GROUND.
Saltwater on the wire connections will short circuit the sync signal on the BLUE wire. Check for non-functional heads in the system. If any one of the heads has a bad GROUND connection it can cause the sync signal to become corrupted. If any one of the heads has it's RED and BLACK wires reverse connected it will corrupt the sync signal.

FLASH PATTERN CHANGING:
If the flash pattern changes on it's own there may be an intermittent short between the BLUE wire and +V. Check for water in the wiring connections. If any one of the heads in the system has an intermittent GROUND connection it can also cause the flash pattern to change.