Installation and Operation Instructions
450R-L6 Remote Switch

The 450R-L6 Remote Switch has 6-way light control. One way Max Current is 40 Amps, while the other five way currents are 15 Amps.

WARNING!

Failure to install or use this product according to manufacturers recommendations may result in property damage, serious injury, and/or death to those you are seeking to protect!

Do not install and/or operate this safety product unless you have read and understand the safety information contained in this manual.

1. **Proper installation combined with operator training in the use, care, and maintenance of emergency warning devices are essential to ensure the safety of you and those you are seeking to protect.**
2. **Exercise caution when working with live electrical connections.**
3. **This product must be properly grounded. Inadequate grounding and/or shorting of electrical connections can cause high current arcing, which can cause personal injury and/or severe vehicle damage, including fire.**
4. **Proper placement and installation are vital to the performance of this warning device. Install this product so that output performance of the system is maximized and the controls are placed within convenient reach of the operator so that s/he can operate the system without losing eye contact with the roadway.**
5. **Do not install this product or route any wires in the deployment area of an air bag. Equipment mounted or located in an air bag deployment area may reduce the effectiveness of the air bag or become a projectile that could cause serious personal injury or death. Refer to the vehicle owner's manual for the air bag deployment area. It is the responsibility of the user/operator to determine a suitable mounting location ensuring the safety of all passengers inside the vehicle particularly avoiding areas of potential head impact.**
6. **It is the responsibility of the vehicle operator to ensure during use that all features of this product work correctly. In use, the vehicle operator should ensure the projection of the warning signal is not blocked by vehicle components (i.e., open trunks or compartment doors), people, vehicles or other obstructions.**
7. **The use of this or any other warning device does not ensure all drivers can or will observe or react to a warning signal. Never take the right-of-way for granted. It is your responsibility to be sure you can proceed safely before entering an intersection, driving against traffic, responding at a high rate of speed, or walking on or around traffic lanes.**
8. **This equipment is intended for use by authorized personnel only. The user is responsible for understanding and obeying all laws regarding warning signal devices. Therefore, the user should check all applicable city, state, and federal laws and regulations. The manufacturer assumes no liability for any loss resulting from the use of this warning device.**

Specifications:

Standby Current: 85 mA
Operation Temperature: -40ºC (40ºF) to +77ºC (170ºF)
Dimensions (HWL):
Switch Box: 1.46'' × 5.22'' × 5.33''
Controller: 0.94'' × 1.97'' × 3.94''

Weight (approx):
Switch Box: 1.1 lbs
Controller: 0.2 lbs
Mounting:
Switch Box: 4-hole flange mounting on base
Controller: 2 mounting holes provided on controller bracket

Handheld Controller Panel:

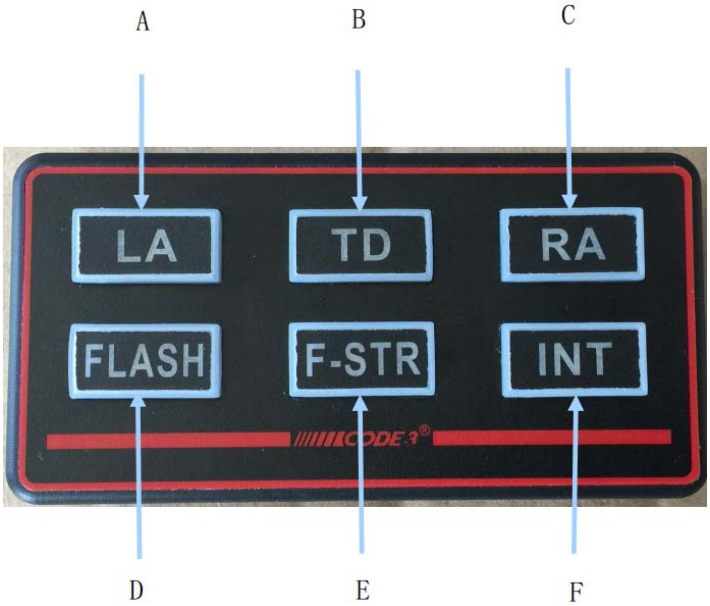

Figure 1

Light Control Buttons A-F: Pressing any of the light control buttons (Figure 1) will turn on that corresponding light control, indicated by a **RED** backlight to the button. While on, pressing the button again will turn off the corresponding light control, indicated by the **RED** backlight turning off as well. (Light Control Output mode can be set up via programming. For details, check Programming Settings)

DIP Switch Features:

	DIP SWITCH DOWN	DIP SWITCH UP
DIP Switch1	Buttoon Press Beep ON	Button Press Beep OFF
DIP Switch2	Sleep Mode ON	Sleep Mode OFF
DIP Switch3	No Function	No Function
DIP Switch4	No Function	No Function

Sleep mode: When control head is left untouched for 10 minutes, all lighting is turned off. To “wake” the control head up, touch any button.

Fuse Introduction & Self-Diagnostic:

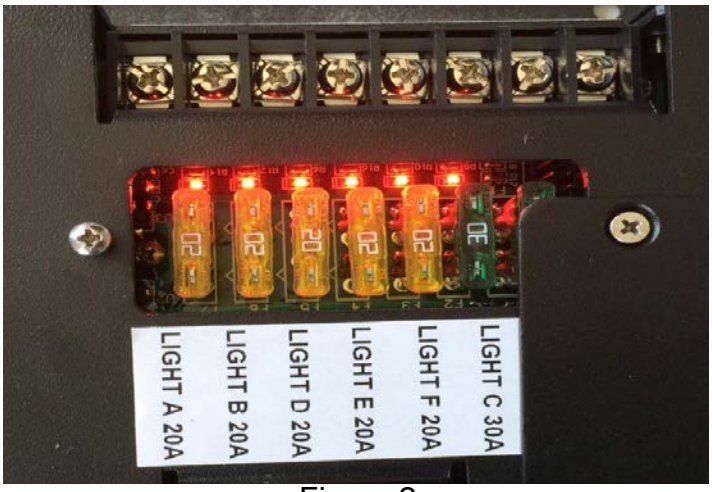

Figure 2

Figure 2 shows the light control fuse box and fuse indicator lights. The max output of light controls A, B, D, E, and F is 15 Amps. The max output of light control C is 40 Amps.

The light control also has a self-diagnostic function. If a light control button is pressed while it has no output, the handheld controller buzzer will continuously make sound and the button’s red indicator light will blink.

The following are Provided In The Box:

Quantity	Part Number	Description
1	140-1471-00	Parts Bag
1	955-0232-00	Box
1	920-0561-00	Install Instructions
1	905-2487-00	Legends Label
1	-	Remote Switch Box
1	-	Remote Switch Control Head

Programming:

1. Turn OFF all the light control buttons. This will put the handheld controller in Standby mode.

2. Press the (C) and (F) buttons together for at least 2 seconds and the handheld controller backlight will begin to blink **BLUE**. Release the two buttons.

3. The **RED** button indicator light for buttons A-F is in current Setting Mode. Press the button for which you want to change modes. The following modes are available to choose from:

   Solid indicator light = MOMENTARY Mode
   Slow flashing light = ON/OFF Mode
   Normal flashing light = TIME OUTPUT Mode
   Quick flashing light = LEVEL OUTPUT Mode

4. Press the (C) and (F) buttons together again for at least 2 seconds and the handheld controller backlight will stop blinking **BLUE**. This exits the Programming Mode and the current setting with be saved.

Connections:

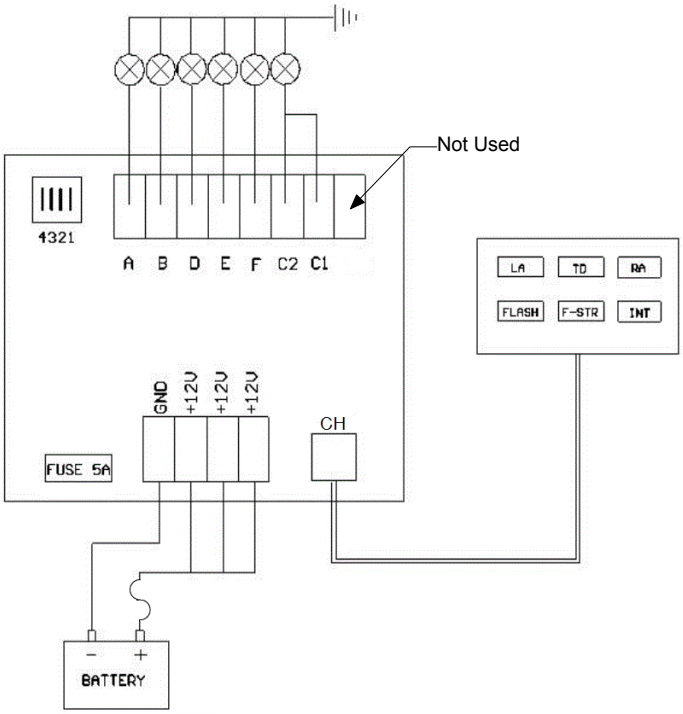

Notes:

Manufacturer Limited Warranty Policy:

Manufacturer warrants that on the date of purchase this product will conform to Manufacturer's specifications for this product (which are available from the Manufacturer upon request). This Limited Warranty extends for Sixty (60) months from the date of purchase.

DAMAGE TO PARTS OR PRODUCTS RESULTING FROM TAMPERING, ACCIDENT, ABUSE, MISUSE, NEGLIGENCE, UNAPPROVED MODIFICATIONS, FIRE OR OTHER HAZARD; IMPROPER INSTALLATION OR OPERATION; OR NOT BEING MAINTAINED IN ACCORDANCE WITH THE MAINTENANCE PROCEDURES SET FORTH IN MANUFACTURER'S INSTALLATION AND OPERATING INSTRUCTIONS VOIDS THIS LIMITED WARRANTY.

Exclusion of Other Warranties:

MANUFACTURER MAKES NO OTHER WARRANTIES, EXPRESS OR IMPLIED. THE IMPLIED WARRANTIES FOR MERCHANTABILITY, QUALITY OR FITNESS FOR A PARTICULAR PURPOSE, OR ARISING FROM A COURSE OF DEALING, USAGE OR TRADE PRACTICE ARE HEREBY EXCLUDED AND SHALL NOT APPLY TO THE PRODUCT AND ARE HEREBY DISCLAIMED, EXCEPT TO THE EXTENT PROHIBITED BY APPLICABLE LAW. ORAL STATEMENTS OR REPRESENTATIONS ABOUT THE PRODUCT DO NOT CONSTITUTE WARRANTIES.

Remedies and Limitation of Liability:

MANUFACTURER'S SOLE LIABILITY AND BUYER'S EXCLUSIVE REMEDY IN CONTRACT, TORT (INCLUDING NEGLIGENCE), OR UNDER ANY OTHER THEORY AGAINST MANUFACTURER REGARDING THE PRODUCT AND ITS USE SHALL BE, AT MANUFACTURER'S DISCRETION, THE REPLACEMENT OR REPAIR OF THE PRODUCT, OR THE REFUND OF THE PURCHASE PRICE PAID BY BUYER FOR NON-CONFORMING PRODUCT. IN NO EVENT SHALL MANUFACTURER'S LIABILITY ARISING OUT OF THIS LIMITED WARRANTY OR ANY OTHER CLAIM RELATED TO THE MANUFACTURER'S PRODUCTS EXCEED THE AMOUNT PAID FOR THE PRODUCT BY BUYER AT THE TIME OF THE ORIGINAL PURCHASE. IN NO EVENT SHALL MANUFACTURER BE LIABLE FOR LOST PROFITS, THE COST OF SUBSTITUTE EQUIPMENT OR LABOR, PROPERTY DAMAGE, OR OTHER SPECIAL, CONSEQUENTIAL, OR INCIDENTAL DAMAGES BASED UPON ANY CLAIM FOR BREACH OF CONTRACT, IMPROPER INSTALLATION, NEGLIGENCE, OR OTHER CLAIM, EVEN IF MANUFACTURER OR A MANUFACTURER'S REPRESENTATIVE HAS BEEN ADVISED OF THE POSSIBILITY OF SUCH DAMAGES. MANUFACTURER SHALL HAVE NO FURTHER OBLIGATION OR LIABILITY WITH RESPECT TO THE PRODUCT OR ITS SALE, OPERATION AND USE, AND MANUFACTURER NEITHER ASSUMES NOR AUTHORIZES THE ASSUMPTION OF ANY OTHER OBLIGATION OR LIABILITY IN CONNECTION WITH SUCH PRODUCT.

This Limited Warranty defines specific legal rights. You may have other legal rights which vary from jurisdiction to jurisdiction. Some jurisdictions do not allow the exclusion or limitation of incidental or consequential damages.

Product Returns:

If a product must be returned for repair or replacement*, please contact our factory to obtain a Return Goods Authorization Number (RGA number) before you ship the product to Code 3®, Inc. Write the RGA number clearly on the package near the mailing label. Be sure you use sufficient packing materials to avoid damage to the product being returned while in transit.

*Code 3®, Inc. reserves the right to repair or replace at its discretion. Code 3®, Inc. assumes no responsibility or liability for expenses incurred for the removal and /or reinstallation of products requiring service and/or repair.; nor for the packaging, handling, and shipping: nor for the handling of products returned to sender after the service has been rendered.

CODE 3®

10986 North Warson Road
St. Louis, MO 63114
Customer Service
(314) 426-2700
c3_tech_support@code3esg.com
www.code3esg.com

An **ECCO SAFETY GROUP**™ Company
www.eccosafetygroup.com