INSTALLATION &OPERATION MANUAL

MODEL 310™

PSE AMBER™

MODEL 310™

SINGLE LAMP REVOLVING BEACON

Contents:

Introduction (with warnings) 2
Unpacking & Pre-Installation 2
Wiring Instructions 2
Mounting Instructions/Warnings 3
Maintenance.....4
Parts List (Replacement Parts/Exploded View)... 5
Warranty..... 6

IMPORTANT: Read all instructions and warnings before installing and using.
INSTALLER: This manual must be delivered to the end user of this equipment.

Introduction

The 310™ beacon has a single rotating warning signal which exceeds, by several times, the SAE standards set for rotating warning lights, and is available in permanent, magnetic, or stanchion mount configurations.

WARNING!

The use of this or any warning device does not insure that all drivers can or will observe or react to an emergency warning signal. Never take the right-of-way for granted. It is your responsibility to be sure you can proceed safely before entering an intersection, driving against traffic, responding at a high rate of speed, or walking on or around traffic lanes.
The effectiveness of this warning device is highly dependent upon correct mounting and wiring. Read and follow the manufacturer's instructions before installing or using this device. The vehicle operator should insure daily that all features of the device operate correctly. In use, the vehicle operator should insure the projection of the warning signal is not blocked by vehicle components (i.e.: open trunks or compartment doors), people, vehicles, or other obstructions.
This equipment is intended for use by authorized personnel only. It is the user's responsibility to understand and obey all laws regarding emergency warning devices. The user should check all applicable city, state and federal laws and regulations.
Code 3, Inc., assumes no liability for any loss resulting from the use of this warning device.
Proper installation is vital to the performance of this warning device and the safe operation of the emergency vehicle. It is important to recognize that the operator of the emergency vehicle is under psychological and physiological stress caused by the emergency situation. The warning device should be installed in such a manner as to: A) Not reduce the output performance of the system, B) Place the controls within convenient reach of the operator so that he can operate the system without losing eye contact with the roadway.
Emergency warning devices often require high electrical voltages and/or currents. Properly protect and use caution around live electrical connections. Grounding or shorting of electrical connections can cause high current arcing, which can cause personal injury and/or severe vehicle damage, including fire.
PROPER INSTALLATION COMBINED WITH OPERATOR TRAINING IN THE PROPER USE OF EMERGENCY WARNING DEVICES IS ESSENTIAL TO INSURE THE SAFETY OF EMERGENCY PERSONNEL AND THE PUBLIC.

Unpacking & Pre-installation

Carefully remove the beacon and place it on a flat surface, taking care not to scratch the lens. Examine the unit for transit damage, broken lamps, etc. If it is convenient, you may wish to test the unit before installation. To test, touch the black wire to the negative ground (earth) and the red wire to the +12 VDC. A battery charger may be used for this purpose. If the vehicle has an electrical system other than 12 VDC. negative ground (earth), and you have not ordered a specially wired beacon, contact your local representative or call the factory for instructions.

Installation & Mounting

Wiring Instructions

The Model 310 Beacon is designed to operate on a 12 VDC negative ground (earth) system. Using #14 ga. or larger wires, connect the black lead to vehicle chassis (earth), or preferably the negative (earth) terminal of the battery. Bring the red lead to the user supplied control switch, and then to the battery or to the stud on the battery side of the starter solenoid or alternator. Install a fuse or circuit breaker of 10 amp capacity in the supply line to protect the vehicle's wiring system against short circuits.

Magnetic Mounting

WARNING!

1) Rust Stains: The magnetic mount is not intended as a permanent mounting for the beacon. Long duration usage of any magnet will expose the high iron content of the steel causing rust. The device should be removed when not used to prevent rust stains. Metallic debris collected by the magnet will also contribute to rust stains. Insure that the magnet is kept clean.
2) Surface rust stains can usually be removed with chrome polish, available at most auto part stores.
3) As with any magnetically-mounted warning device, its use on the exterior of a moving vehicle is at the sole discretion and responsibility of the user.
This magnetic mount product provides a secure, temporary installation in most circumstances and is recommended for stationary use only. For maximum warning signal, mount the beacon on the highest possible flat, level surface of the vehicle.

Stanchion Mounting

The 310™ Beacon is available with factory installed threaded flanges, 1/2” NPT or 3/4” NPT. Route the wiring as described above and make the recommended connections. Guide user wiring through the pipe and terminate securely to the power lead and ground wires of the Mode 310 Beacon. Fasten the flange mount beacon onto the pipe by hand until secure. **DO NOT OVERTIGHTEN!**

Permanent-Resilient Mounting

Locate the Model 310 Beacon on the highest possible level surface on the vehicle for the maximum warning signal. Caution! When drilling into any vehicle surface, make sure that each side is free from anything that could be damaged (i.e., electrical wires, fuel lines or vehicle upholstery). Use the three mounting bosses of the beacon base as a template to establish pilot holes. Drill three equally spaced 3/8” holes on a 5-1/2” dia. bolt circle. See Figure 1. Locate the mounting hardware as illustrated and insert into the 3/8” holes. The correctly installed rubber-threaded insert is a watertight and shock-resistant mount which will increase the effectiveness and long life of the product. Do not overtighten the screws! In applications where the protruding screw enters the passenger compartment, the screw can be reversed to minimize the risk of personal injury on the protruding screw threads. See figure 2. Do not tighten nut until hardware is positioned properly.

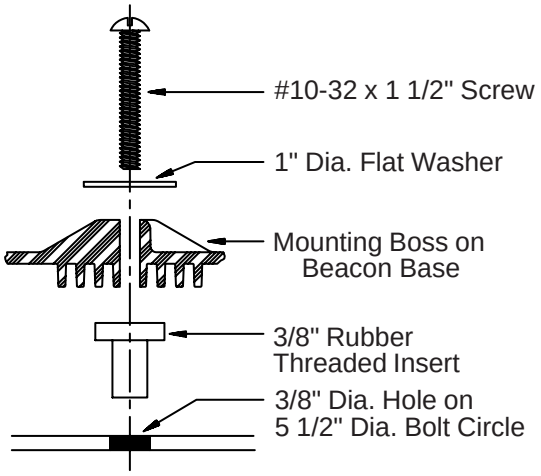

FIGURE 1

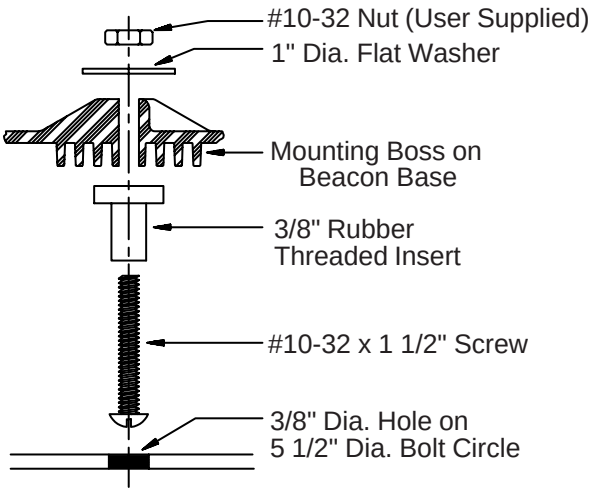

FIGURE 2

Maintenance

WARNING! Lamps are extremely hot! Allow to cool completely before attempting to remove. Gloves and eye protection should be worn when handling halogen lamps as they are pressurized and accidental breakage can result in flying glass.

Lens Removal

Remove the 4 mounting screws and lift off the lens.

Lamp Replacement

H-1 55 WATT LAMP

First grasp lamp at base and turn until retaining clip is accessible. Using a blade screwdriver, remove retaining clip and pull lamp straight up. Replace with new lamp. Insure that the power lead and retaining clip is fully inserted.
NOTE: Do not touch new lamp with your bare fingers, as this will damage the lamp and shorten its life. If touched accidentally, it should be gently wiped off with alcohol and a soft cloth.

Reflector Removal

H-1 55 WATT REFLECTOR

Remove lamp as described above and lift off the reflector assembly.

Motor Replacement

Remove reflector as described above. Remove the two motorplate mounting screws. Cut lamp wire and lift out motor, socket and shaft assembly. Install new assembly and solder the wires to their original location. Test unit before replacing the lens.

General

Do not oil or grease this unit. Doing so voids the product warranty. It is constructed with permanently lubricated bearings and plastic gears which do not need lubrication. Keep the unit clean by disassembling it and cleaning bearing surfaces with mineral spirits (turpentine), and clear any debris out of the drive gears. Clean lens and base with soap and water, using soft cloth or paper towel. In severe climates excessive condensation may occur - if so, drill open the two remaining auxiliary ventilation holes.

Parts & Exploded Views

(See exploded diagram)

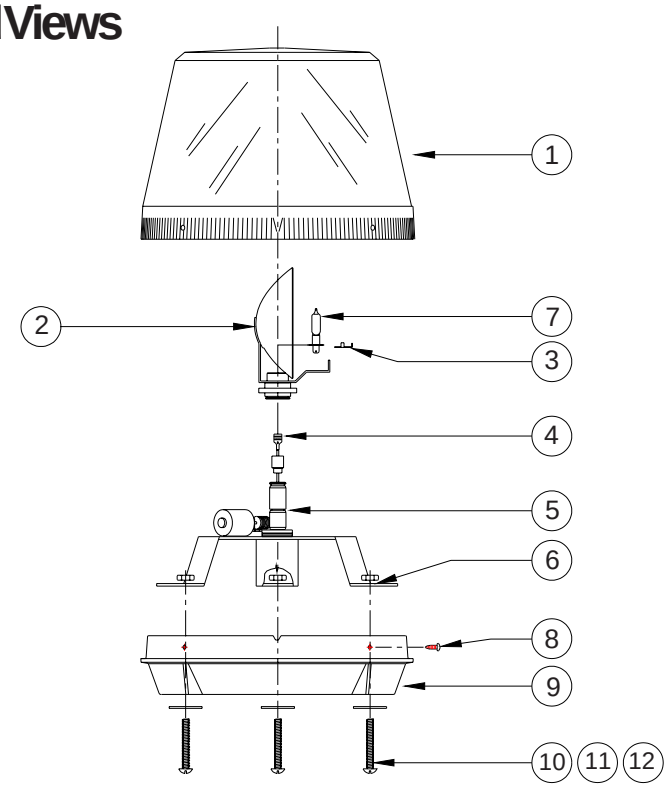

FIGURE 3

Parts List

Ref No.	Description	Part No.	Qty.
1	Lens - Amber	2224	1
	- Red	2222	
	- Blue	2223	
	- Green	2220	
2	Reflector Assembly	S03069	1
3	Retaining Clip	928	1
4	Power Wire Assembly	S91431	1
5	H1 Motorplate Assembly	S91330	1
6	Rotator Mounting Bracket	S70361	1
7	55 Watt H1 halogen lamp	1543	1
8	Lens Retaining Screws	1647	4
9	Base Assembly	S70362	1
10	#10-32 x 1 1/2 Screw	6929	3
11	1 Dia. Gasket (Magnetic Mount only)	1642	3
12	#10-32 Nut	5501	3

Parts Not Shown

16	Fastener Parts Bag	1849
17	Coil Cord with Lighter Plug	502
18	1" NPT Pipe Flange Mounting Kit	3F1H
19	1/2" NPT Pipe Flange Mounting Kit	3F2H
20	3/4" NPT Pipe Flange Mounting Kit	3F3H
21	Universal Pipe Flange Mounting Kit	3UH
22	Magnets	1587

NOTE: Removal of reflector assembly from gear/shaft/plate assembly is not necessary for partial disassembly of unit or general maintenance.

NOTES

NOTES

WARRANTY

Public Safety Equipment emergency devices are tested and found to be operational at the time of manufacture. Provided they are installed and operated in accordance with manufacturer's recommendations, PSE guarantees all parts and components except the lamps to a period of 1 year (unless otherwise expressed) from the date of purchase or delivery, whichever is later. Units demonstrated to be defective within the warranty period will be repaired or replaced at the factory service center at no cost.

Use of lamp or other electrical load of a wattage higher than installed or recommended by the factory, or use of inappropriate or inadequate wiring or circuit protection causes this warranty to become void. Failure or destruction of the product resulting from abuse or unusual use and/or accidents is not covered by this warranty. PSE shall in no way be liable for other damages including consequential, indirect or special damages whether loss is due to negligence or breach of warranty.

Public Safety Equipment, INC. MAKES NO OTHER EXPRESS OR IMPLIED WARRANTY INCLUDING, WITHOUT LIMITATION, WARRANTIES OF FITNESS OR MERCHANTABILITY, WITH RESPECT TO THIS PRODUCT.

PRODUCT RETURNS

If a product must be returned for repair or replacement*, please contact our factory to obtain a Return Goods Authorization Number (RGA number) before you ship the product to Public Safety Equipment, Inc. Write the RGA number clearly on the package near the mailing label. Be sure you use sufficient packing materials to avoid damage to the product being returned while in transit.

*Public Safety Equipment, Inc. reserves the right to repair or replace at its discretion and assumes no responsibility or liability for expenses incurred for the removal or reinstallation of products requiring service or repair.; nor for the packaging, handling, and shipping: nor for the handling of products return to sender after the service has been rendered.

Trouble Shooting Guidelines

If you experience any product problems, please refer to the Troubleshooting Guidelines located in most Operation and Installation Manuals. If you need further assistance, please call our Technical Help Hotline @ (314)426-2700, ext. 2131 or 2132. We will be happy to assist you.

PSE AMBER™

PROBLEMS OR QUESTIONS? CALL OUR TECHNICAL ASSISTANCE HOTLINE (314) 996-2800
www.CODE3PSE.COM

Public Safety Equipment, Inc.
10986 N. Warson Road
St. Louis, Missouri 63114-2029—USA
Ph. (314) 426-2700 Fax (314) 426-1337

310 and PSE AMBER are trademarks of Public Safety Equipment, Inc.

Revision 4, 3/2008 - Instruction Book Part No. T07843
©2008 Public Safety Equipment, Inc. Printed in USA